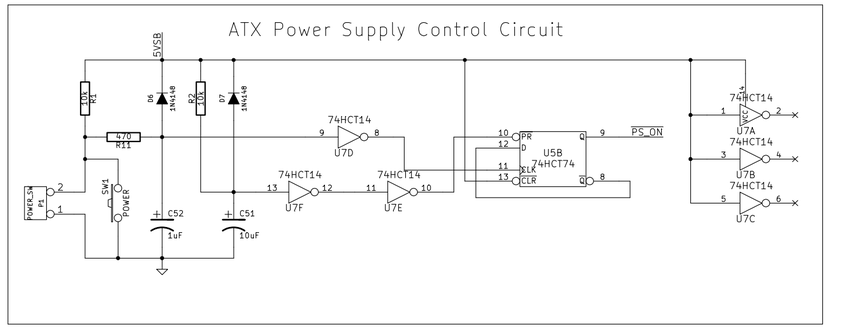

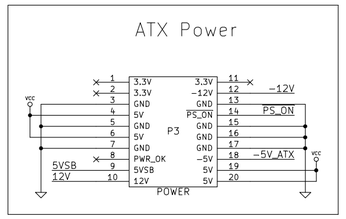

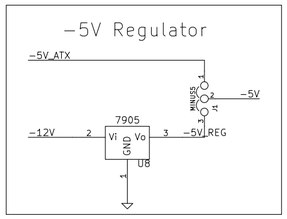

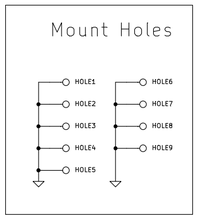

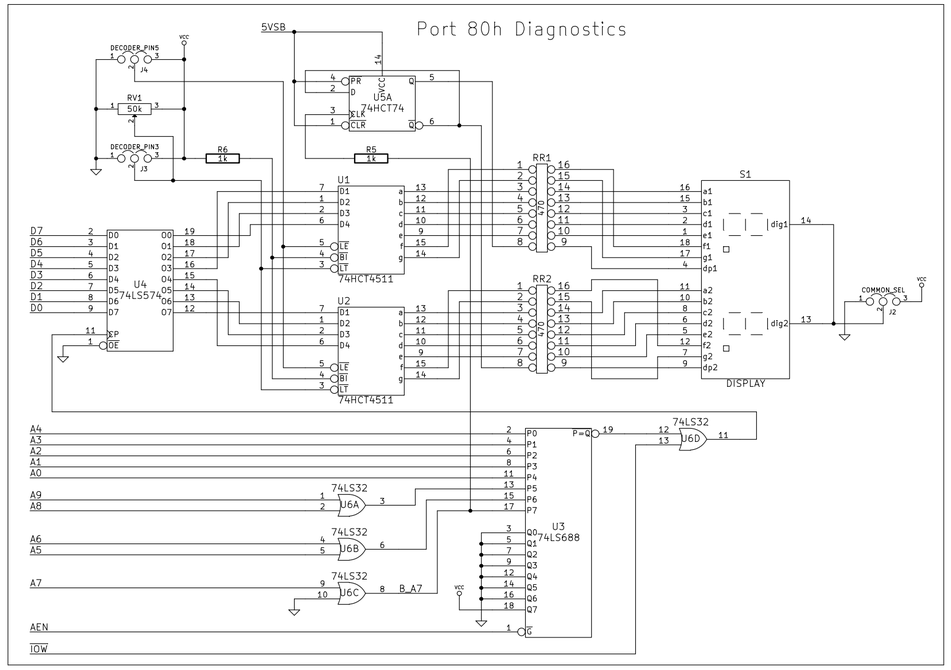

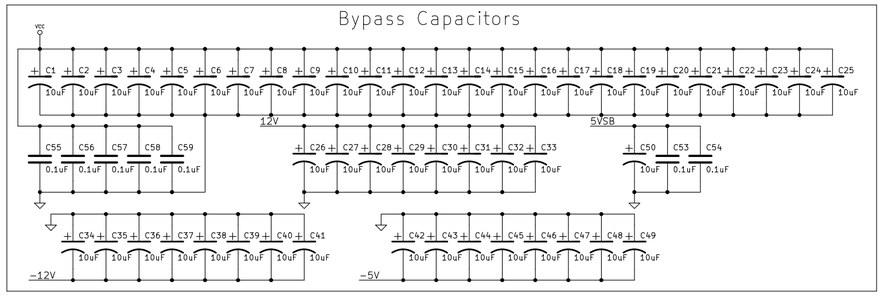

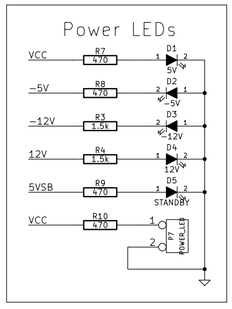

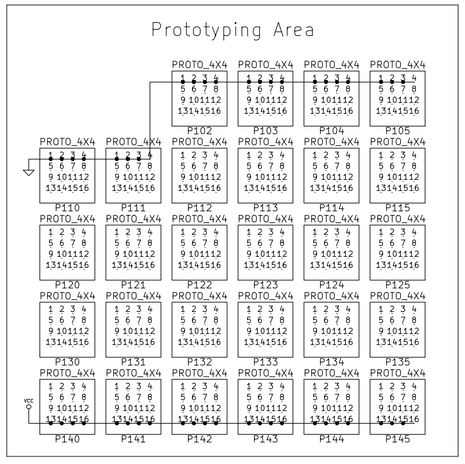

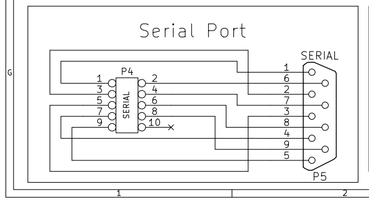

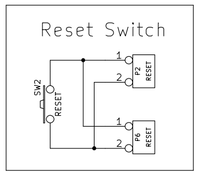

POST Display Configuration

The board support a variety of 7-segment decoders and common anode / common cathode displays.

Please use the following table to determine the correct position of switches J2-J4:

7-Segment Decoder Type	Hexadecimal Support	Matching Display Type	J2	J3	J4	Built in current limiters**
74LS47, 74LS247	Limited - Distinct figures for codes A-F	Common anode	2-3	2-3	2-3	No
74LS48, 74LS248	Limited - Distinct figures for codes A-F	Common cathode	1-2	2-3	2-3	No
CD4511, MC14511, 74HCT4511	No - Blanks for codes A-F	Common cathode	1-2	2-3	1-2	No
Mitel MD4311BE	Yes	Common cathode	1-2	2-3	1-2	No
DM9368	Yes	Common cathode	1-2	1-2	2-3	Yes
DM9370, DM9374	Yes - DM9370 Limited - DM9374	Common anode	2-3	1-2	2-3	No - DM9370 Yes - DM9374
D345D, D346D, D347D, D348D	Yes - D345D, D346D Limited - D347D, D348D	Common anode	2-3	Trim/NC*	2-3	Yes - D346D, D348D No - D345D, D347D

* For decoders D346D and D347D the RV1 trimmer should be installed instead of the JP3.
This trimmer is used to adjust the intensity of LED display.
For decoders D345D and D346D J3 should be left open

** No need for current limiting resistor arrays, except of the resistor for the decimal point.

File: isa_backplane.sch		
Sheet: /		
Title: Sergey's XT (C) 2012 Sergey Kiselev, GNU Free Documentation License (GFDL)		
Size: A2	Date: 8 oct 2012	**Rev:**
KiCad E.D.A. eeschema (2012-01-19 BZR 3256)-stable		Id: 1/1